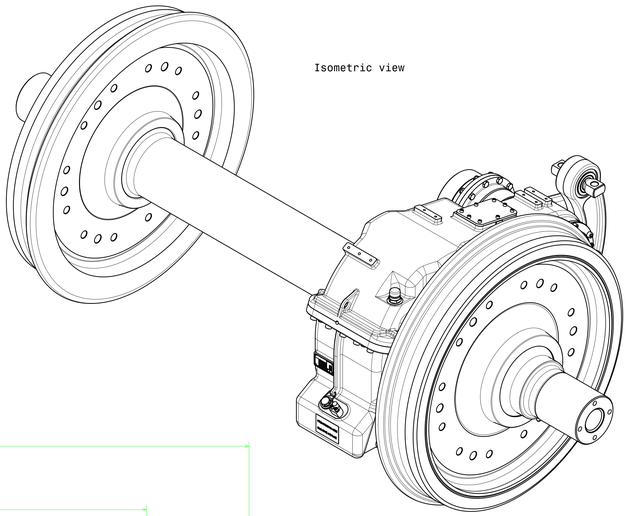

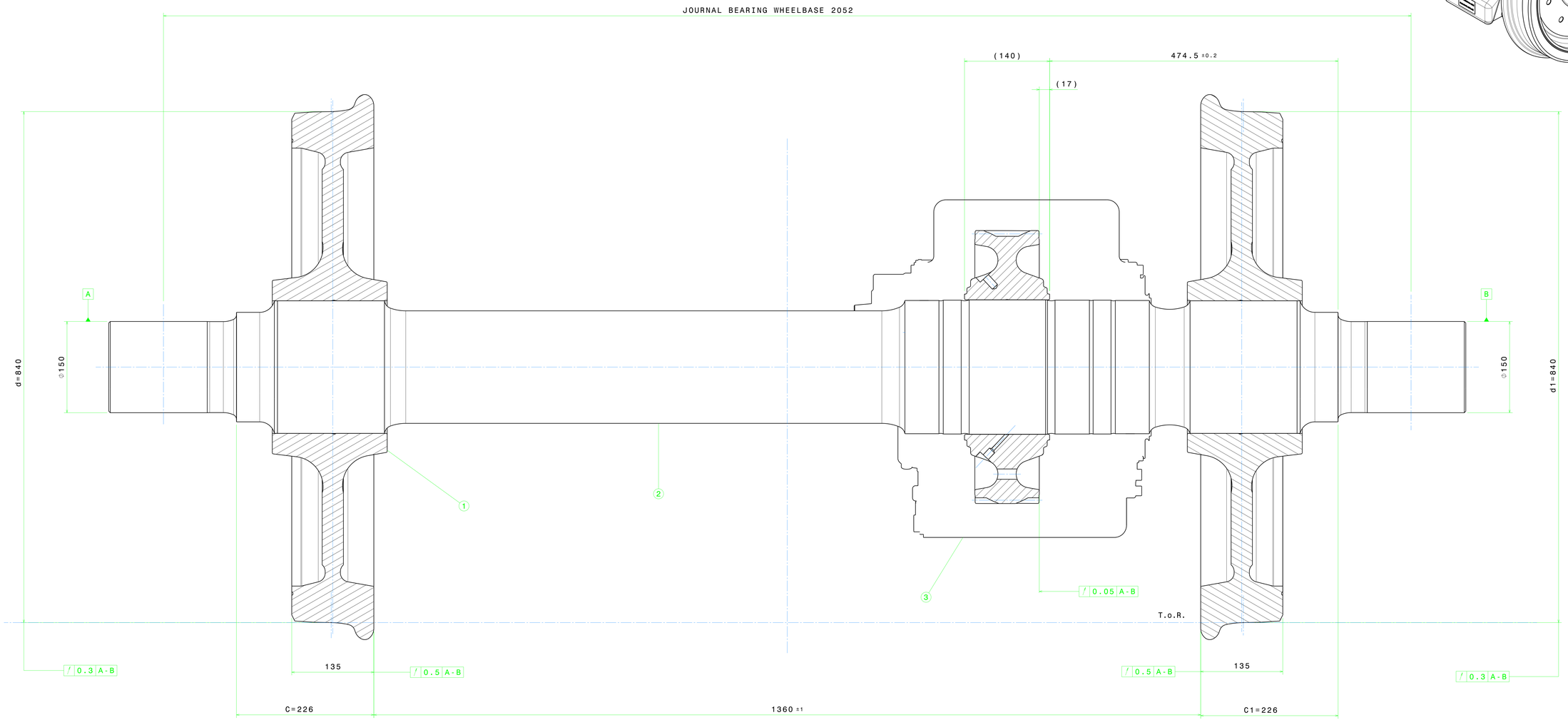

3	Gearbox with coupling	1	GZ10.04.20.50000
2	Powered Axle	1	GZ10.04.04.30000
1	Monobloc Wheel	2	GZ10.04.04.20010

				-	-	-	429kg
				-	-	-	448.5kg
						-	310kg
							1510.5

No	Parça Adı Designation Name of Item	Adet Qty.	Resim No / Norm Drawing No / Norm	Malzeme Material	Ölçü Dimension	Ağırlık Weight [KG]

MARKING
Reference drawing "GZ10.04.04.30000"

GENERAL NOTES
- Design according to EN13260 and TS-02.075
- Difference C-C1 ≤ 1mm
- Difference d-d1 ≤ 0.3mm

ISO 21920-1	ISO 8015	ISO 2553	General Tol.
EN 15085-2 Certification Level		CL1☐ CL2☐	Weld Pro.
		CL3☐	Cast Steel

ISO 2768	f☐	m☒	H☐
ISO 13920	A☐	B☐	E☐
ISO 12708	LmS☐	LrS☐	SmS☐

Approved	L.Giovinazzo	15/02/2023	Scale
Checked	M.Borlo	15/02/2023	1:2.5
Prepared	D.Carlino	15/02/2023	

Motor bogie wheelset
-

TURASAS
Turkish Railway Vehicles Industry Inc.

GZ10.04.04.11100

TYP

Date: 15/02/2023 | Sheet : 1/1 | Size:A0 | Rev: 00

Technical Specifications					
Technical Document					
Fixture/Mould Asset ID.					
Coating/Heat Tre./Roughness					
Paint/Color	-	Modf. No	Modification Description	Date	Sign

ISO 1302 Welded Construction		
<1000	6,0	0,8
<630	4,0	0,7
<400	3,0	0,6
<250	3,0	0,4
100	2,0	0,3
40	1,5	0,2
L mm	Hem	Yşl.

ISO 2768 General Dimension		
Nom. Size	Class	
<4000	2,0	0,4
<2000	1,2	0,4
<1000	0,8	0,3
<400	0,5	0,3
30-120	0,3	0,2
2-30	0,2	0,1
L mm	m	K

ISO 1101 Geometric Tolerance		
Nom. Size	Class	
>20000	9,0	8,0
<20000	8,0	7,0
<16000	7,0	6,0
<12000	6,0	5,0
<8000	5,0	4,0
<4000	4,0	3,0
<2000	3,0	2,0
<1000	2,0	1,5
<400	1,0	1,0
30-120	1,0	0,5
2-30	1,0	0,5
L mm	A	E

ISO 1302 Surface Roughness		
Nom. Size	Class	
<1000	6,0	0,8
<630	4,0	0,7
<400	3,0	0,6
<250	3,0	0,4
100	2,0	0,3
40	1,5	0,2
L mm	Hem	Yşl.

Reproduction, dissemination or use of this document or its contents is only lawful with the prior written permission of TURASAS. Violations will be liable for the payment of damages. All rights reserved in the event of the grant of a patent, utility model or design registration.